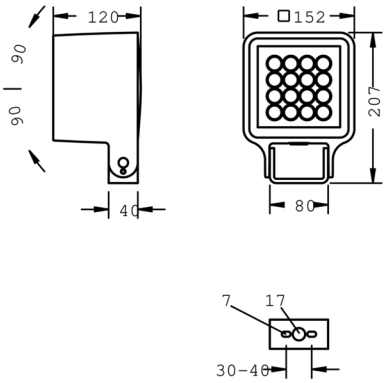

Monocube 4

8 264 046 129

16 × 2,3 W, 2762 lm, 3000 K warm white, DALI, linear, vertical 54° / 7°

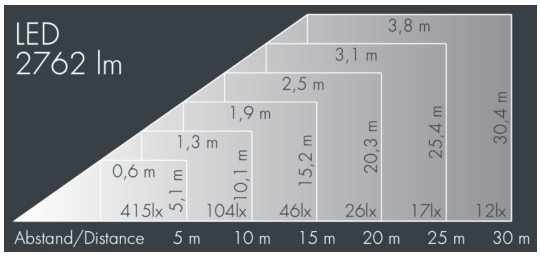

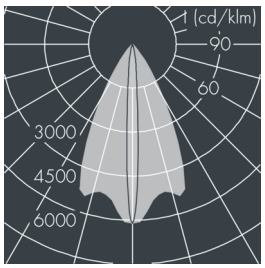

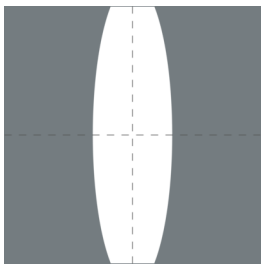

Customized solutions and modifications are possible: Special RAL, DB or NCS colours as polyester powder coat, luminaires in 2700 K and other colour temperatures and versions for high ambient temperature.

Specification text

housing made of corrosion-resistant die-cast aluminum AlSi12, polyester powder coated by high-quality and UV-stabilized coating process, Colour: black RAL 7021, all exterior parts are stainless steel, tempered safety glass, anti-reflective coating from 1 side, dark screenprint, silicon gasket, closure with 4 stainless steel screws, 2 drilled holes Ø 7 mm, spacing 30 - 40 mm, 1 centre hole Ø 21 mm, tilt range: 180°, cable gland: M20, connecting terminal: 5 pole, precise PMMA optics, integral driver (DALI), CRI > 80, max 2 SDCM,
service life L90/B10 > 50.000 h,
Beam angle (FWHM): 54° / 7°, luminous flux: 2762 lm, wattage: 37 W, delivered lumens 75 lm/W, protection type IP65, protection class I, impact resistance IK08, windage area 0,02 m², dimensions (L×H×W): 152 × 120 × 152 mm, weight 2.4 kg

The modular luminaire design makes the replacement of components possible. The product meets the demands of the applicable EU guidelines and product safety regulations and bears the CE mark.

IP65 IK08

Specification

Wattage	37 W	Beam angle (FWHM)	54° / 7°
Delivered lumens	75 lm/W	Housing colour	black RAL 7021
Light source	LED 3000 K	Power supply cable	Ø 6 – 13 mm
Color Rendering Index	CRI > 80	Protection type	IP65
Colour tolerance	max 2 SDCM	Protection class	I
Lifetime ta 25° C	L90/B10 > 50.000 h	Impact resistance	IK08
Control gear	DALI	Windage area	0,02m²
Input voltage AC	220 – 240 V	Dimensions	152 × 120 × 152 mm
Input voltage DC	220 – 240 V	Weight	2,40 kg
Voltage protection	4 kV L/N | 2 kV L/PE	Max. ambient temperature ta	35°
Luminaires per B16A / C16A	23 / 39		