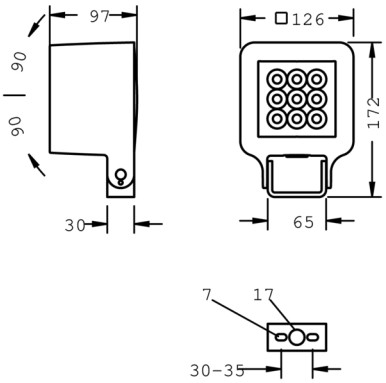


## Monocube 3

8 263 066 129

9 × 2,5 W, 1624 lm, 3000 K warm white, DALI, linear, vertical 54° / 7°

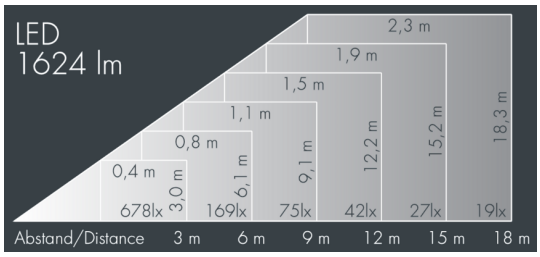


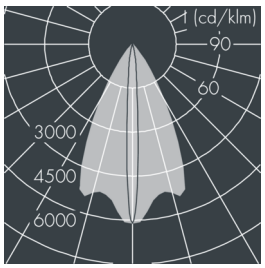


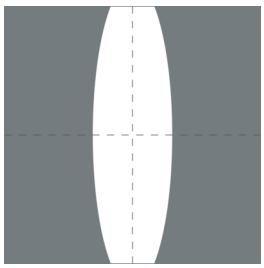

Customized solutions and modifications are possible: Special RAL, DB or NCS colours as polyester powder coat, luminaires in 2700 K and other colour temperatures and versions for high ambient temperature.

### Specification text

housing made of corrosion-resistant die-cast aluminum AlSi12, polyester powder coated by high-quality and UV-stabilized coating process, Colour: white RAL 9002, all exterior parts are stainless steel, tempered safety glass, anti-reflective coating from 1 side, dark screenprint, silicon gasket, closure with 4 stainless steel screws, 2 drilled holes Ø 7 mm, spacing 30 - 35 mm, 1 centre hole Ø 17 mm, tilt range: 180°, cable gland: M20, connecting terminal: 5 pole, precise PMMA optics, integral driver (DALI), CRI > 80, max 2 SDCM,
service life L90/B10 > 50.000 h,
Beam angle (FWHM): 54° / 7°, luminous flux: 1624 lm, wattage: 23 W, delivered lumens 71 lm/W, protection type IP65, protection class I, impact resistance IK08, windage area 0,013 m², dimensions (L×H×W): 126 × 97 × 126 mm, weight 1.8 kg

The modular luminaire design makes the replacement of components possible. The product meets the demands of the applicable EU guidelines and product safety regulations and bears the CE mark.

IP65 IK08

## Specification

| | | | |
|---|---|---|---|
| Wattage | 23 W | Beam angle (FWHM) | 54° / 7° |
| Delivered lumens | 71 lm/W | Housing colour | white RAL 9002 |
| Light source | LED 3000 K | Power supply cable | Ø 6 – 13 mm |
| Color Rendering Index | CRI > 80 | Protection type | IP65 |
| Colour tolerance | max 2 SDCM | Protection class | I |
| Lifetime ta 25° C | L90/B10 > 50.000 h | Impact resistance | IK08 |
| Control gear | DALI | Windage area | 0,013m² |
| Input voltage AC | 220 – 240 V | Dimensions | 126 × 97 × 126 mm |
| Input voltage DC | 200 – 250 V | Weight | 1,80 kg |
| Voltage protection | 2 kV L/N \| 4 kV L/PE | Max. ambient temperature ta | 30° |
| Luminaires per B16A / C16A | 50 / 85 | | |