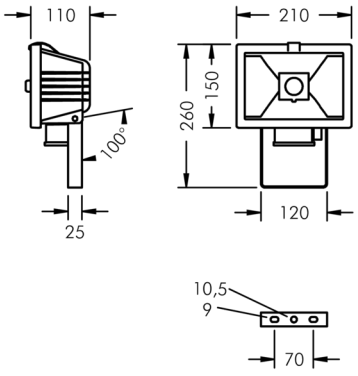

LED-floodlights Mini

8 540 096 059

41 W, 4072 lm, 3000 K warm white,
wide beam 56° / 72°

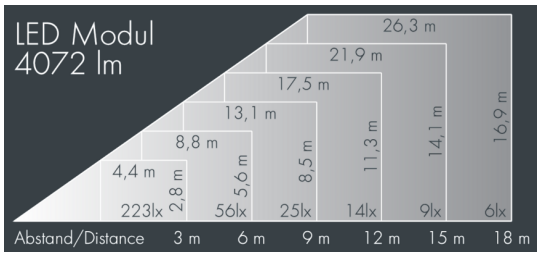

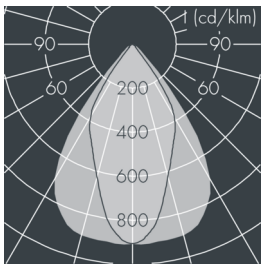

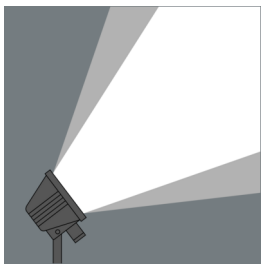

Customized solutions and modifications are possible: Special RAL, DB or NCS colours as polyester powder coat, luminaires in 2700 K and other colour temperatures and versions for high ambient temperature.

Specification text

housing made of die-cast aluminum AlSi12, unpainted, Colour: unpainted , all exterior parts are stainless steel, tempered safety glass, anti-reflective coating from 1 side, silicon gasket, 1 stainless steel release fastener, stainless steel mounting bracket: 2 holes Ø 9 mm, spacing 70 mm, 1 centre hole Ø 10.5 mm, tilt range: 100°, cable gland: PG 11, connecting terminal: 3 pole, axially symmetrical highgloss reflector , integral control gear, CRI > 80, max 2 SDCM, service life L90/B10 > 50.000 h,
Beam angle (FWHM): 56° / 72°, luminous flux: 4072 lm, wattage: 41 W, delivered lumens 99 lm/W, protection type IP65, protection class I, impact resistance IK08, windage area 0,04 m², dimensions (L×H×W): 210 × 110 × 150 mm, weight 1.7 kg

The modular luminaire design makes the replacement of components possible. The product meets the demands of the applicable EU guidelines and product safety regulations and bears the CE and ENEC marks.

IP65 IK08

Specification

Wattage	41 W	Beam angle (FWHM)	56° / 72°
Delivered lumens	99 lm/W	Housing colour	unpainted
Light source	LED 3000 K	Power supply cable	Ø 5 – 13 mm
Color Rendering Index	CRI > 80	Protection type	IP65
Colour tolerance	max 2 SDCM	Protection class	I
Lifetime ta 25° C	L90/B10 > 50.000 h	Impact resistance	IK08
Control gear	on / off	Windage area	0,04m²
Input voltage AC	120 – 277 V	Dimensions	210 × 110 × 150 mm
		Weight	1,70 kg
		Max. ambient temperature ta	35°