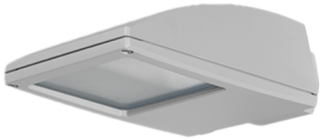

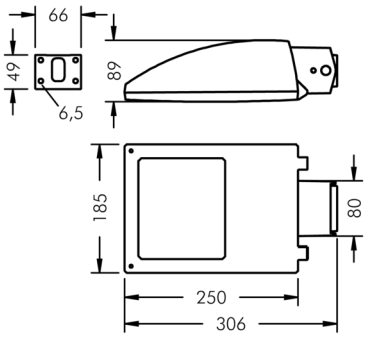

Fluxa Mini G

8 290 146 279

36 W, 3157 lm, 3000 K warm white, 1-10V, wide beam

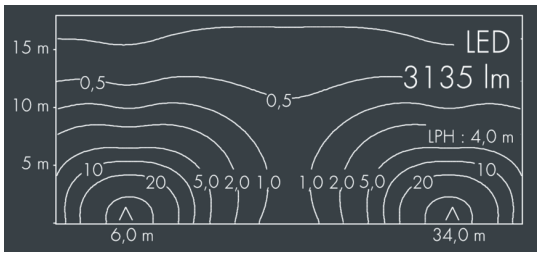

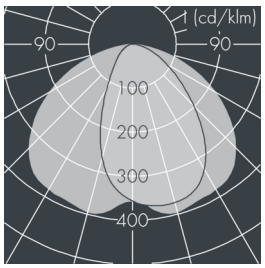

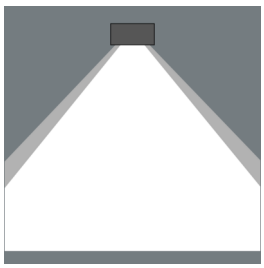

Customized solutions and modifications are possible: Special RAL, DB or NCS colours as polyester powder coat, luminaires in 2700 K and other colour temperatures and versions for high ambient temperature.

Specification text

housing made of corrosion-resistant die-cast aluminum AlSi12, polyester powder coated by high-quality and UV-stabilized coating process, Colour: black RAL 7021, all exterior parts are stainless steel, tempered safety glass, anti-reflective coating from 1 side, with prismatic glass
for reduced glare, silicon gasket, closure with 4 stainless steel screws, adjustable bracket assembly: 4 drilled holes Ø 6,5 mm, spacing 50 x 30 mm, tilt range: + / - 15°, cable gland: M16, connecting terminal: 5 pole, highly efficient anodized rotationally symmetrical reflector with matt finish, integral driver (1-10V), CRI > 70, luminous flux: 3157 lm, wattage: 36 W, delivered lumens 88 lm/W, protection type IP65, protection class I, impact resistance IK08, windage area 0,047 m², dimensions (L×H×W): 250 × 89 × 185 mm, weight 2.3 kg

The modular luminaire design makes the replacement of components possible. The product meets the demands of the applicable EU guidelines and product safety regulations and bears the CE mark.

IP65 IK08

Specification

Wattage	36 W	Housing colour	black RAL 7021
Delivered lumens	88 lm/W	Power supply cable	Ø 7 – 9 mm
Light source	LED 3000 K	Protection type	IP65
Color Rendering Index	CRI > 70	Protection class	I
Control gear	1-10V	Impact resistance	IK08
Input voltage AC	220 – 240 V	Windage area	0,047m²
Input voltage DC	195 – 250 V	Dimensions	250 × 89 × 185 mm
Voltage protection	2 kV L/N | 4 kV L/PE	Weight	2,30 kg
Luminaires per B16A / C16A	50 / 85	Max. ambient temperature ta	35°