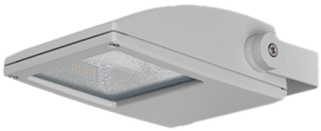

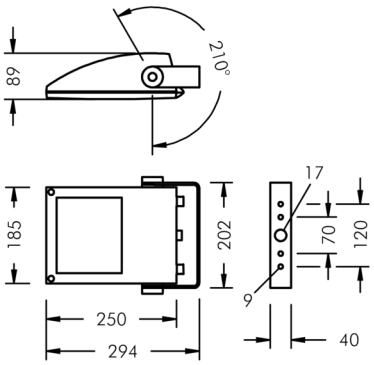

Fluxa Mini

8 290 066 059

36 W, 3277 lm, 3000 K warm white,
wide beam 61° / 145°

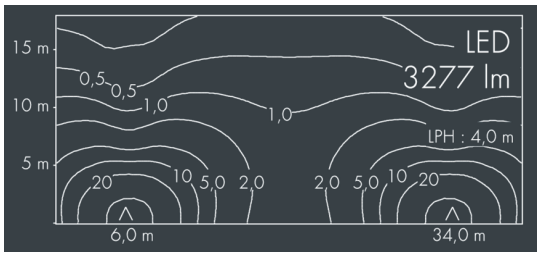

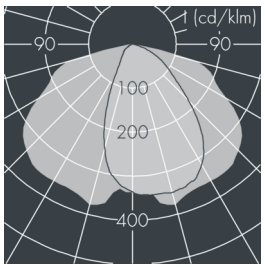

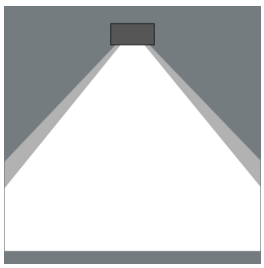

Customized solutions and modifications are possible: Special RAL, DB or NCS colours as polyester powder coat, luminaires in 2700 K and other colour temperatures and versions for high ambient temperature.

Specification text

housing made of corrosion-resistant die-cast aluminum AlSi12, polyester powder coated by high-quality and UV-stabilized coating process, Colour: white RAL 9002, all exterior parts are stainless steel, tempered safety glass, anti-reflective coating from 1 side, silicon gasket, closure with 4 stainless steel screws, mounting bracket powder coated aluminum with tilt scale: 4 drilled holes Ø 8.5 mm, spacing 70 mm (120 mm), 1 centre hole Ø 17 mm, tilt range: 210°, cable gland: M16, connecting terminal: 3 pole, highly efficient anodized rotationally symmetrical reflector with matt finish, integral driver (AC/DC), CRI > 70, max 3 SDCM, service life L90/B10 > 50.000 h, Beam angle (FWHM): 61° / 145°, luminous flux: 3277 lm, wattage: 36 W, delivered lumens 92 lm/W, protection type IP65, protection class I, impact resistance IK08, windage area 0,047 m², dimensions (L×H×W): 250 × 89 × 185 mm, weight 2.3 kg

The modular luminaire design makes the replacement of components possible. The product meets the demands of the applicable EU guidelines and product safety regulations and bears the CE mark.

IP65 IK08

Specification

Wattage	36 W	Beam angle (FWHM)	61° / 145°
Delivered lumens	92 lm/W	Housing colour	white RAL 9002
Light source	LED 3000 K	Power supply cable	Ø 7 – 9 mm
Color Rendering Index	CRI > 70	Protection type	IP65
Colour tolerance	max 3 SDCM	Protection class	I
Lifetime ta 25° C	L90/B10 > 50.000 h	Impact resistance	IK08
Control gear	on / off	Windage area	0,047m²
Input voltage AC	220 – 240 V	Dimensions	250 × 89 × 185 mm
Input voltage DC	195 – 250 V	Weight	2,30 kg
Voltage protection	2 kV L/N | 4 kV L/PE	Max. ambient temperature ta	35°
Luminaires per B16A / C16A	50 / 85		