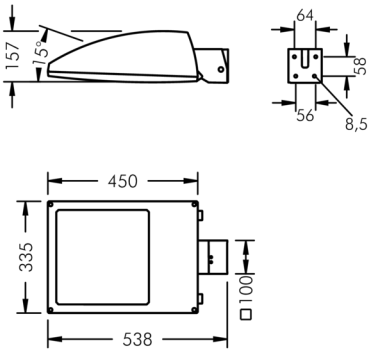

Fluxa BG

8 289 166 149

2 × 79 W, 14792 lm, 3000 K warm white, DALI, asymmetrical 65°

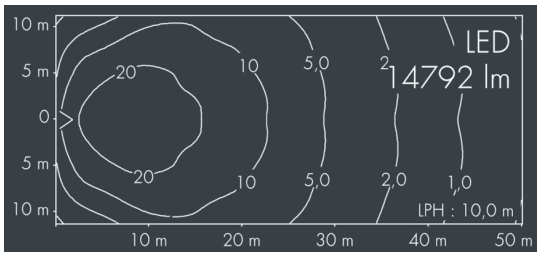

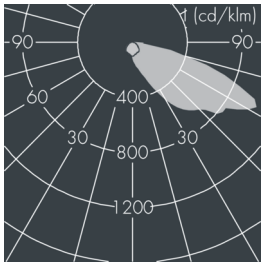

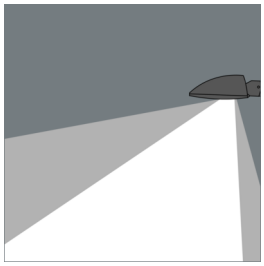

Customized solutions and modifications are possible: Special RAL, DB or NCS colours as polyester powder coat, luminaires in 2700 K and other colour temperatures and versions for high ambient temperature.

Specification text

housing made of corrosion-resistant die-cast aluminum AlSi12, polyester powder coated by high-quality and UV-stabilized coating process, Colour: white RAL 9002, all exterior parts are stainless steel, tempered safety glass, anti-reflective coating from 1 side, silicon gasket, closure with 4 stainless steel screws, adjustable bracket assembly: 2 drilled holes Ø 8.5 mm, spacing 64 mm, 2 drilled holes Ø 8.5 mm, spacing 56 mm, tilt range: 15°, cable gland: M20, connecting terminal: 5 pole, highly efficient anodized rotationally symmetrical reflector with matt finish, inegral, dimmable driver (DALI), CRI > 70, max 2 SDCM, service life L90/B10 > 50.000 h, luminous flux: 14792 lm, wattage: 157 W, delivered lumens 94 lm/W, protection type IP65, protection class I, impact resistance IK09, windage area 0,16 m², dimensions (L×H×W): 450 × 150 × 335 mm, weight 9.7 kg

The modular luminaire design makes the replacement of components possible. The product meets the demands of the applicable EU guidelines and product safety regulations and bears the CE mark.

IP65 IK09

Specification

Wattage	157 W	Housing colour	white RAL 9002
Delivered lumens	94 lm/W	Power supply cable	Ø 8 – 15 mm
Light source	LED 3000 K	Protection type	IP65
Color Rendering Index	CRI > 70	Protection class	I
Colour tolerance	max 2 SDCM	Impact resistance	IK09
Lifetime ta 25° C	L90/B10 > 50.000 h	Windage area	0,16m²
Control gear	DALI	Dimensions	450 × 150 × 335 mm
		Weight	9,70 kg
		Max. ambient temperature ta	35°