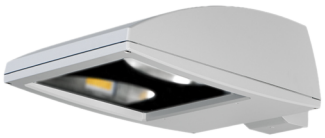

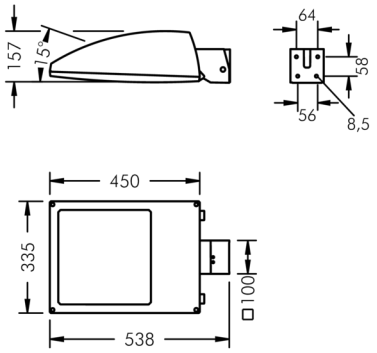

Fluxa BG

8 288 166 079

2 × 70 W, 10533 lm, 3000 K warm white,
wide beam 61° / 133°

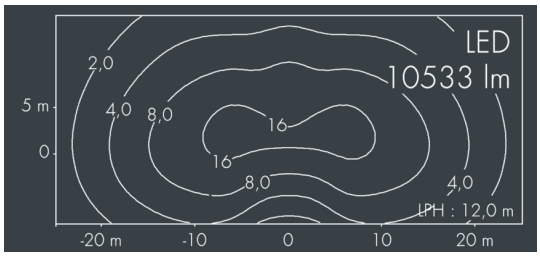

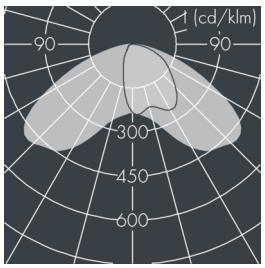

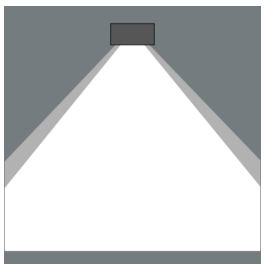

Customized solutions and modifications are possible: Special RAL, DB or NCS colours as polyester powder coat, luminaires in 2700 K and other colour temperatures and versions for high ambient temperature.

Specification text

housing made of corrosion-resistant die-cast aluminum AlSi12, polyester powder coated by high-quality and UV-stabilized coating process, Colour: white RAL 9002, all exterior parts are stainless steel, tempered safety glass, anti-reflective coating from 1 side, with prismatic glass
for reduced glare, silicon gasket, closure with 4 stainless steel screws, adjustable bracket assembly: 2 drilled holes Ø 8.5 mm, spacing 64 mm, 2 drilled holes Ø 8.5 mm, spacing 56 mm, tilt range: 15°, cable gland: M20, connecting terminal: 3 pole, highly efficient anodized rotationally symmetrical reflector with matt finish, integral driver (AC/DC), CRI > 70, max 2 SDCM, service life L90/B10 > 50.000 h,
Beam angle (FWHM): 61° / 133°, luminous flux: 10533 lm, wattage: 139 W, delivered lumens 76 lm/W, protection type IP65, protection class I, impact resistance IK09, windage area 0,16 m², dimensions (L×H×W): 450 × 157 × 335 mm, weight 9.7 kg

The modular luminaire design makes the replacement of components possible. The product meets the demands of the applicable EU guidelines and product safety regulations and bears the CE mark.

IP65 IK09

Specification

Wattage	139 W	Beam angle (FWHM)	61° / 133°
Delivered lumens	76 lm/W	Housing colour	white RAL 9002
Light source	LED 3000 K	Power supply cable	Ø 8 – 15 mm
Color Rendering Index	CRI > 70	Protection type	IP65
Colour tolerance	max 2 SDCM	Protection class	I
Lifetime ta 25° C	L90/B10 > 50.000 h	Impact resistance	IK09
Control gear	on / off	Windage area	0,16m²
Input voltage AC	220 – 240 V	Dimensions	450 × 157 × 335 mm
Input voltage DC	195 – 255 V	Weight	9,70 kg
Voltage protection	6 kV L/N | 10 kV L/PE	Max. ambient temperature ta	40°
Luminaires per B16A / C16A	5 / 10		