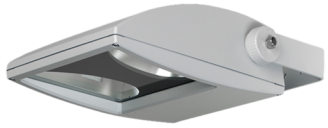

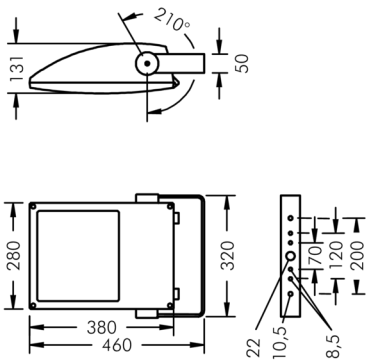

Fluxa A

8 287 065 079

2 × 31 W, 6445 lm, 4000 K neutral white,
wide beam 62° / 130°

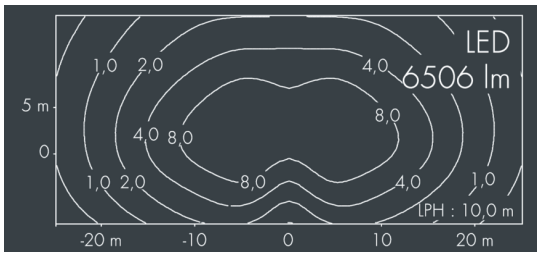

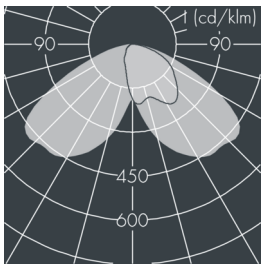

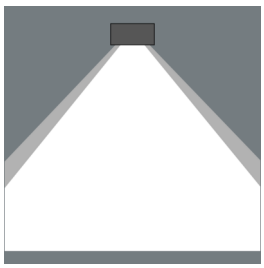

Customized solutions and modifications are possible: Special RAL, DB or NCS colours as polyester powder coat, luminaires in 2700 K and other colour temperatures and versions for high ambient temperature.

Specification text

housing made of corrosion-resistant die-cast aluminum AlSi12, polyester powder coated by high-quality and UV-stabilized coating process, Colour: white RAL 9002, all exterior parts are stainless steel, tempered safety glass, anti-reflective coating from 1 side, with prismatic glass
for reduced glare, silicon gasket, closure with 4 stainless steel screws, powder coated aluminum mounting bracket with tilt scale: 4 holes Ø 8.5 mm, spacing 70 mm (120 mm), 2 drilled holes Ø 10 mm, spacing 200 mm, 1 centre hole Ø 22 mm, tilt range: 210°, cable gland: M20, connecting terminal: 3 pole, highly efficient anodized rotationally symmetrical reflector with matt finish, integral control gear, CRI > 70, max 2 SDCM, service life L90/B10 > 50.000 h,
Beam angle (FWHM): 62° / 130°, luminous flux: 6445 lm, wattage: 62 W, delivered lumens 104 lm/W, protection type IP67, protection class I, impact resistance IK08, windage area 0,11 m², dimensions (L×H×W): 380 × 131 × 280 mm, weight 6.2 kg

The modular luminaire design makes the replacement of components possible. The product meets the demands of the applicable EU guidelines and product safety regulations and bears the CE and ENEC marks.

IP67 IK08

Specification

Wattage	62 W	Beam angle (FWHM)	62° / 130°
Delivered lumens	104 lm/W	Housing colour	white RAL 9002
Light source	LED 4000 K	Power supply cable	Ø 8 – 15 mm
Color Rendering Index	CRI > 70	Protection type	IP67
Colour tolerance	max 2 SDCM	Protection class	I
Lifetime ta 25° C	L90/B10 > 50.000 h	Impact resistance	IK08
Control gear	on / off	Windage area	0,11m²
Input voltage AC	170 – 260 V	Dimensions	380 × 131 × 280 mm
Input voltage DC	176 – 276 V	Weight	6,20 kg
Voltage protection	6 kV L/N | 10 kV L/PE	Max. ambient temperature ta	45°
Luminaires per B16A / C16A	12 / 0		