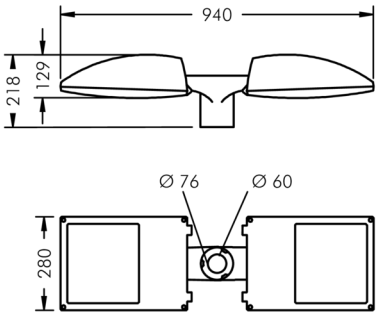

Fluxa A

8 286 446 169

2 x 1 × 63 W, 6387 lm, 3000 K warm white, DALI, asymmetrical 55°

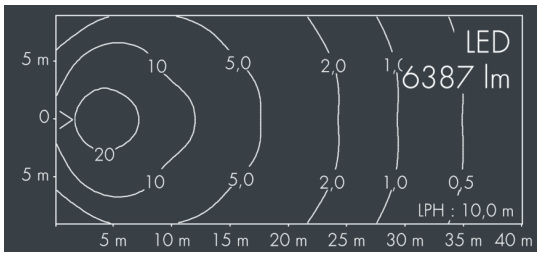

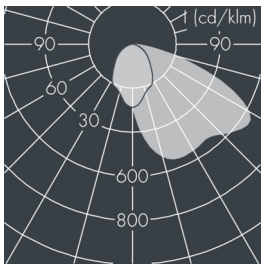

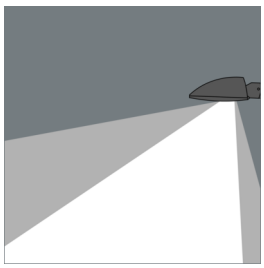

Customized solutions and modifications are possible: Special RAL, DB or NCS colours as polyester powder coat, luminaires in 2700 K and other colour temperatures and versions for high ambient temperature.

Specification text

housing made of corrosion-resistant die-cast aluminum AlSi12, polyester powder coated by high-quality and UV-stabilized coating process, Colour: black RAL 7021, all exterior parts are stainless steel, tempered safety glass, anti-reflective coating from 1 side, with prismatic glass
for reduced glare, silicon gasket, Closure with 2 x 4 stainless steel screws, with double pole top fitter, for pole top Ø 60/76mm, with 2 x 8m rubber cable H05RN-F5G1, cable gland: M20, connecting terminal: 5 pole, highly efficient anodized rotationally symmetrical reflector with matt finish, integral driver (DALI / Step Dim / Astro Dim), CRI > 70, max 2 SDCM, service life L90/B10 > 50.000 h, luminous flux: 6387 lm, wattage: 63 W, delivered lumens 101 lm/W, protection type IP67, protection class I, impact resistance IK08, windage area 0,11 m², dimensions (L×H×W): 380 × 131 × 280 mm, weight 12.3 kg

The modular luminaire design makes the replacement of components possible. The product meets the demands of the applicable EU guidelines and product safety regulations and bears the CE and ENEC marks.

IP67 IK08

Specification

Wattage	63 W	Housing colour	black RAL 7021
Delivered lumens	101 lm/W	Power supply cable	Ø 8 – 15 mm
Light source	LED 3000 K	Protection type	IP67
Color Rendering Index	CRI > 70	Protection class	I
Colour tolerance	max 2 SDCM	Impact resistance	IK08
Lifetime ta 25° C	L90/B10 > 50.000 h	Windage area	0,11m²
Control gear	DALI	Dimensions	380 × 131 × 280 mm
Input voltage AC	170 – 260 V	Weight	12,30 kg
Input voltage DC	176 – 276 V	Max. ambient temperature ta	45°
Voltage protection	6 kV L/N | 10 kV L/PE		
Luminaires per B16A / C16A	12 / 0		