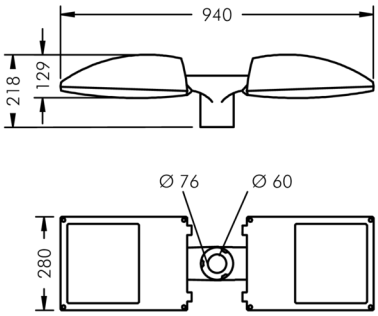


## Fluxa A

8 285 455 149

2 x 1 × 48 W, 5713 lm, 4000 K neutral white, DALI, asymmetrical 60°

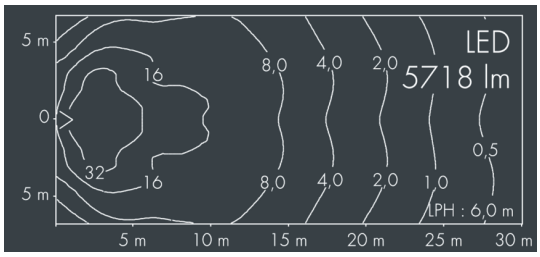


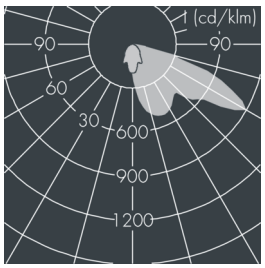


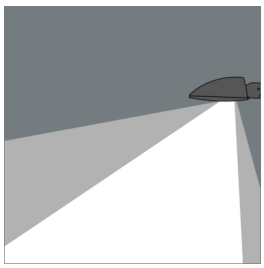

Customized solutions and modifications are possible: Special RAL, DB or NCS colours as polyester powder coat, luminaires in 2700 K and other colour temperatures and versions for high ambient temperature.

### Specification text

housing made of corrosion-resistant die-cast aluminum AlSi12, polyester powder coated by high-quality and UV-stabilized coating process, Colour: silver grey , all exterior parts are stainless steel, tempered safety glass, anti-reflective coating from 1 side, silicon gasket, Closure with 2 x 4 stainless steel screws, with double pole top fitter, for pole top Ø 60/76mm, with 2 x 8m rubber cable H05RN-F5G1, cable gland: M20, connecting terminal: 5 pole, highly efficient anodized rotationally symmetrical reflector with matt finish, integral driver (DALI / Step Dim / Astro Dim), CRI > 70, max 2 SDCM, service life L90/B10 > 50.000 h, luminous flux: 5713 lm, wattage: 48 W, delivered lumens 119 lm/W, protection type IP67, protection class I, impact resistance IK08, windage area 0,11 m², dimensions (L×H×W): 380 × 131 × 280 mm, weight 12.3 kg

The modular luminaire design makes the replacement of components possible. The product meets the demands of the applicable EU guidelines and product safety regulations and bears the CE and ENEC marks.

IP67 IK08

## Specification

| | | | |
|---|---|---|---|
| Wattage | 48 W | Housing colour | silver grey |
| Delivered lumens | 119 lm/W | Power supply cable | Ø 8 – 15 mm |
| Light source | LED 4000 K | Protection type | IP67 |
| Color Rendering Index | CRI > 70 | Protection class | I |
| Colour tolerance | max 2 SDCM | Impact resistance | IK08 |
| Lifetime ta 25° C | L90/B10 > 50.000 h | Windage area | 0,11m² |
| Control gear | DALI | Dimensions | 380 × 131 × 280 mm |
| Input voltage AC | 170 – 260 V | Weight | 12,30 kg |
| Input voltage DC | 176 – 276 V | Max. ambient temperature ta | 45° |
| Voltage protection | 6 kV L/N \| 10 kV L/PE | | |
| Luminaires per B16A / C16A | 12 / 0 | | |