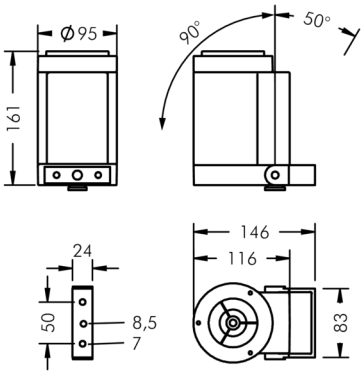

Ecospot

8 981 055 049

19 W, 1275 lm, 4000 K neutral white,
medium wide beam 15°

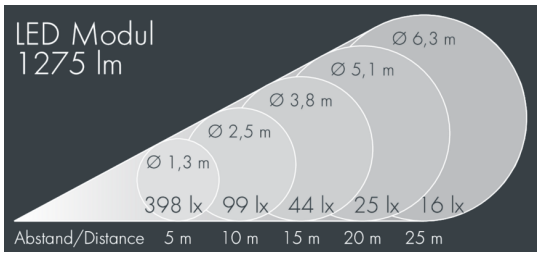

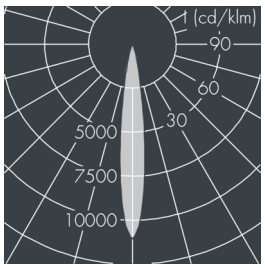

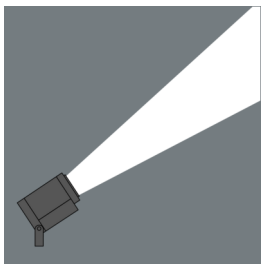

Customized solutions and modifications are possible: Special RAL, DB or NCS colours as polyester powder coat, luminaires in 2700 K and other colour temperatures and versions for high ambient temperature.

Specification text

housing made of die-cast aluminum AlSi12, polyester powder coated by high-quality and UV-stabilized coating process, Colour: silver grey , all exterior parts are stainless steel, tempered high effiency safety glass, anti-reflective coating from 1 side, silicon gasket, with 3 stainless steel screws, powder coated aluminum mounting bracket with tilt scale: 2 drilled holes Ø 7 mm, spacing 30 mm, 1 centre hole Ø 8.5 mm, tilt range: 140°, cable gland: M20, connecting terminal: 3 pole, highly efficient anodized rotationally symmetrical reflector with matt finish, integral driver (AC/DC), CRI > 80, max 2 SDCM, service life L80/B20 > 50.000 h, Beam angle (FWHM): 15°, luminous flux: 1275 lm, wattage: 19 W, delivered lumens 61 lm/W, protection type IP65, protection class I, impact resistance IK08, windage area 0,01 m², dimensions: Ø 95 mm, width 165 mm, weight 1.5 kg

The modular luminaire design makes the replacement of components possible. The product meets the demands of the applicable EU guidelines and product safety regulations and bears the CE mark.

IP65 IK08

Specification

Wattage	19 W	Beam angle (FWHM)	15°
Delivered lumens	61 lm/W	Housing colour	silver grey
Light source	LED 4000 K	Power supply cable	Ø 6 – 13 mm
Color Rendering Index	CRI > 80	Protection type	IP65
Colour tolerance	max 2 SDCM	Protection class	I
Lifetime ta 25° C	L80/B20 > 50.000 h	Impact resistance	IK08
Control gear	on / off	Windage area	0,01m²
Input voltage AC	220 – 240 V	Dimensions	Ø 95 mm, width 165 mm
Input voltage DC	220 – 240 V	Weight	1,50 kg
Voltage protection	2 kV L/N | 4 kV L/PE	Max. ambient temperature ta	35°
Luminaires per B16A / C16A	50 / 85		