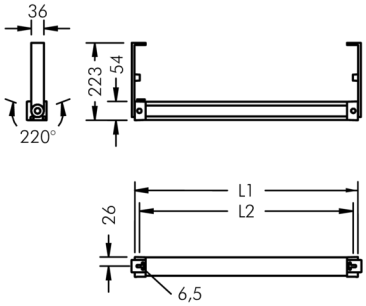

Ecoline

8 793 256 209

12 × 2,5 W, 2118 lm, 3000 K warm white, 1-10V, wall washer 12° / 108°
L1 = 1262 mm, L2 = 1215 mm

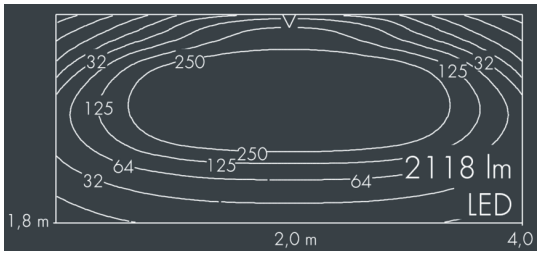

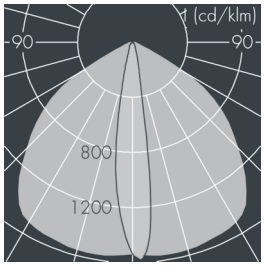

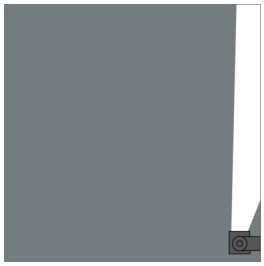

Customized solutions and modifications are possible: Special RAL, DB or NCS colours as polyester powder coat, luminaires in 2700 K and other colour temperatures and versions for high ambient temperature.

Specification text

housing made of extruded aluminum and corrosion-resistant die-cast aluminum AlSi12, polyester powder coated by high-quality and UV-stabilized coating process, Colour: silver grey , all exterior parts are stainless steel, UV stabilised, impact-resistant polycarbonate cover with partial frosting for uniform light diffraction, silicon gasket, closure with 2 stainless steel screws, wall arms: 2 drilled holes Ø 6.5 mm, spacing L2, tilt range: 220°, cable gland: M20, connecting terminal: 5 pole, highly efficient optics made of transparent thermoplastic for precise lighting tasks , integral driver (1-10V), CRI > 80, max 2 SDCM, service life L90/B10 > 50.000 h, Beam angle (FWHM): 12° / 108°, luminous flux: 2118 lm, wattage: 30 W, delivered lumens 71 lm/W, protection type IP67, protection class I, impact resistance IK10, windage area 0,1 m², dimensions (L×H×W): 1262 × 58 × 54 mm, weight 4.1 kg

The modular luminaire design makes the replacement of components possible. The product meets the demands of the applicable EU guidelines and product safety regulations and bears the CE and ENEC marks.

IP67 IK10

Specification

Wattage	30 W	Beam angle (FWHM)	12° / 108°
Delivered lumens	71 lm/W	Housing colour	silver grey
Light source	LED 3000 K	Power supply cable	Ø 6 – 10 mm
Color Rendering Index	CRI > 80	Protection type	IP67
Colour tolerance	max 2 SDCM	Protection class	I
Lifetime ta 25° C	L90/B10 > 50.000 h	Impact resistance	IK10
Control gear	1-10V	Windage area	0,1m²
Input voltage AC	110 – 240 V	Dimensions	1262 × 58 × 54 mm
Input voltage DC	195 – 240 V	Weight	4,10 kg
Voltage protection	2 kV L/N | 4 kV L/PE	Max. ambient temperature ta	40°
Luminaires per B16A / C16A	50 / 85		