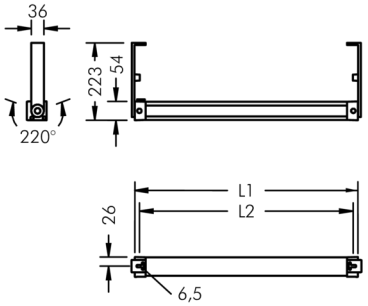

Ecoline

8 793 156 289

9 × 2,5 W, 1576 lm, 3000 K warm white, 1-10V, asymmetrical 36° / 64°
L1 = 962 mm, L2 = 915 mm

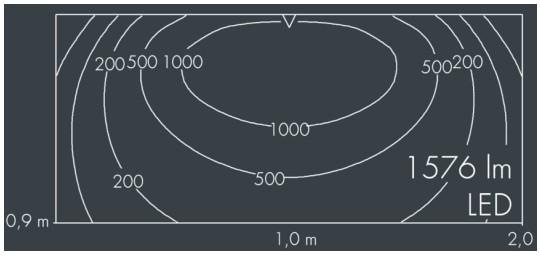

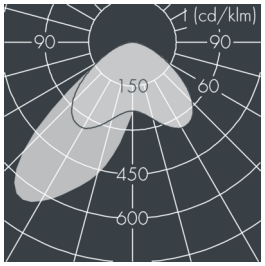

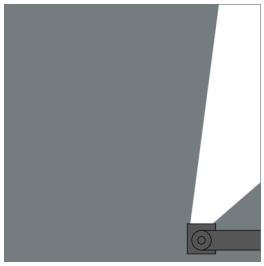

Customized solutions and modifications are possible: Special RAL, DB or NCS colours as polyester powder coat, luminaires in 2700 K and other colour temperatures and versions for high ambient temperature.

Specification text

housing made of extruded aluminum and corrosion-resistant die-cast aluminum AlSi12, polyester powder coated by high-quality and UV-stabilized coating process, Colour: silver grey , all exterior parts are stainless steel, UV stabilised, impact-resistant polycarbonate cover with partial frosting for uniform light diffraction, silicon gasket, closure with 2 stainless steel screws, wall arms: 2 drilled holes Ø 6.5 mm, spacing L2, tilt range: 220°, cable gland: M20, connecting terminal: 5 pole, highly efficient optics made of transparent thermoplastic for precise lighting tasks , CRI > 80, max 2 SDCM, service life L90/B10 > 50.000 h, luminous flux: 1576 lm, wattage: 23 W, delivered lumens 70 lm/W, protection type IP65, protection class I, impact resistance IK10, windage area 0,1 m², dimensions (L×H×W): 962 × 58 × 54 mm, weight 3.6 kg

The modular luminaire design makes the replacement of components possible. The product meets the demands of the applicable EU guidelines and product safety regulations and bears the CE and ENEC marks.

IP65 IK10

Specification

Wattage	23 W	Housing colour	silver grey
Delivered lumens	70 lm/W	Power supply cable	Ø 6 – 10 mm
Light source	LED 3000 K	Protection type	IP65
Color Rendering Index	CRI > 80	Protection class	I
Colour tolerance	max 2 SDCM	Impact resistance	IK10
Lifetime ta 25° C	L90/B10 > 50.000 h	Windage area	0,1m²
Control gear	1-10V	Dimensions	962 × 58 × 54 mm
Input voltage AC	110 – 240 V	Weight	3,60 kg
Input voltage DC	195-	Max. ambient temperature ta	40°
Voltage protection	2 kV L/N | 4 kV L/PE		
Luminaires per B16A / C16A	50 / 85		