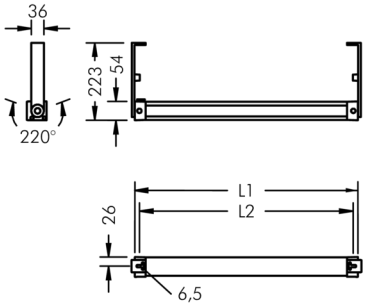

Ecoline

8 793 156 019

9 × 2,1 W, 2124 lm, 3000 K warm white, narrow beam 6°

L1 = 962 mm, L2 = 915 mm

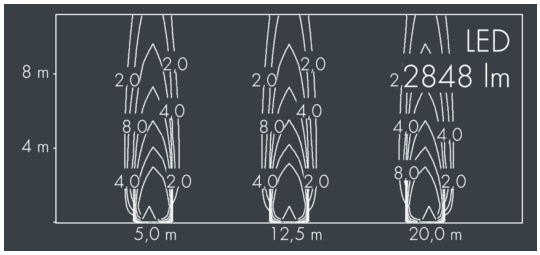

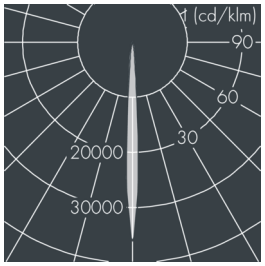

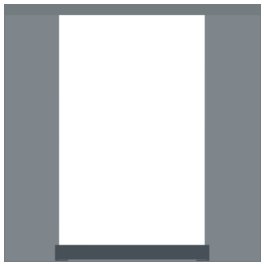

Customized solutions and modifications are possible: Special RAL, DB or NCS colours as polyester powder coat, luminaires in 2700 K and other colour temperatures and versions for high ambient temperature.

Specification text

housing made of extruded aluminum and corrosion-resistant die-cast aluminum AlSi12, polyester powder coated by high-quality and UV-stabilized coating process, Colour: silver grey , all exterior parts are stainless steel, UV stabilised, impact-resistant polycarbonate cover with partial frosting for uniform light diffraction, silicon gasket, closure with 2 stainless steel screws, wall arms: 2 drilled holes Ø 6.5 mm, spacing L2, tilt range: 220°, cable gland: M20, connecting terminal: 3 pole, highly efficient optics made of transparent thermoplastic for precise lighting tasks , integral driver (AC/DC), CRI > 80, max 2 SDCM, service life L90/B10 > 50.000 h, Beam angle (FWHM): 6°, luminous flux: 2124 lm, wattage: 36 W, delivered lumens 59 lm/W, protection type IP65, protection class I, impact resistance IK10, windage area 0,1 m², dimensions (L×H×W): 962 × 57 × 54 mm, weight 2.9 kg

The modular luminaire design makes the replacement of components possible. The product meets the demands of the applicable EU guidelines and product safety regulations and bears the CE and ENEC marks.

IP65 IK10

Specification

Wattage	36 W	Beam angle (FWHM)	6°
Delivered lumens	59 lm/W	Housing colour	silver grey
Light source	LED 3000 K	Power supply cable	Ø 6 – 10 mm
Color Rendering Index	CRI > 80	Protection type	IP65
Colour tolerance	max 2 SDCM	Protection class	I
Lifetime ta 25° C	L90/B10 > 50.000 h	Impact resistance	IK10
Control gear	on / off	Windage area	0,1m²
Input voltage AC	220 – 240 V	Dimensions	962 × 57 × 54 mm
Input voltage DC	220 – 240 V	Weight	2,90 kg
Voltage protection	4 kV L/N | 2 kV L/PE	Max. ambient temperature ta	40°
Luminaires per B16A / C16A	27 / 46		